Work Order ID 61530

Monday, August 30, 2010 10:18:46 AM

Item ID: D3281-4L02 **Accept** **Setup Start** **Stop**

Revision ID:

Item Name: Floor Protector, Aft RH (Black)

Start Date: 8/30/2010 **Start Qty:** 3.00 **Cust Item ID:**

Required Date: 9/6/2010 **Req'd Qty:** 3.00 **Customer:**

Reference:

Approvals: **Process Plan:** M **Date:** 10-8-30 **Tooling:** _____ **Date:** _____ **Run Start** **Stop**

QC: _____ **Date:** _____ **SPC (Y/N):** _____ **Date:** _____

Sequence ID/ Work Center ID	Operation Description	Set Up/ Run Hours	Tool ID	Tool #	Plan Code	Accept Qty	Reject Qty	Reject Number	Insp. Stamp

Draw Nbr	Revision Nbr
D3281	Rev E
DSI 9504	A

100 — 0.00

Thermoform — HAND FINISHING THERMOFORMING

Thermoforming Machine — **Memo** 0.00 — Cut Blanks

DL x3 10/09/08

105 — 0.00

HandThermo — Dry Material

Hand Finishing Thermoforming — **Memo** 0.00 — Dry Sheet as per QSI022 POLYCARBONATE

Temp: 240° F

Time IN: 4:30 pm 10/09/07

Time OUT: 7:00 am 10/09/08

DL 10/09/08

Dart Aerospace Ltd

W/O:		WORK ORDER CHANGES					
DATE	STEP	PROCEDURE CHANGE	By	Date	Qty	Approval Chief Eng / Prod Mgr	Approval QC Inspector

Part No: _____ **PAR #:** _____ **Fault Category:** _____ **NCR:** Yes No **DQA:** _____ **Date:** _____

Resolution: _____ **Disposition:** _____ **QA: N/C Closed:** _____ **Date:** _____

NCR:		WORK ORDER NON-CONFORMANCE (NCR)						
DATE	STEP	Description of NC Section A	Corrective Action Section B			Verification Section C	Approval Chief Eng	Approval QC Inspector
			Initial Chief Eng	Action Description Chief Eng	Sign & Date			

NOTE: Date & initial all entries

H:\fFORMS\Quality Assurance\approved QA\NCRWO RevE

Work Order ID 61530

Monday, August 30, 2010 10:18:46 AM

Item ID: D3281-4L02 **Accept** **Setup Start** **Stop**

Revision ID:

Item Name: Floor Protector, Aft RH (Black)

Start Date: 8/30/2010 **Start Qty:** 3.00 **Cust Item ID:**

Required Date: 9/6/2010 **Req'd Qty:** 3.00 **Customer:**

Reference:

Approvals: **Process Plan:** _____ **Date:** _____ **Tooling:** _____ **Date:** _____ **Run Start** **Stop**

QC: _____ **Date:** _____ **SPC (Y/N):** _____ **Date:** _____

Sequence ID/ Work Center ID	Operation Description	Set Up/ Run Hours	Tool ID	Tool #	Plan Code	Accept Qty	Reject Qty	Reject Number	Insp. Stamp
110		0.00							
Thermoform	THERMOFORMING MACHINE								
Thermoforming Machine	**Memo**	0.00							
	Thermoform as per Dwg. D3281 and Folio FTA 010 Dwg. Rev. E Folio Rev. D								
120	QC2- Inspect parts off machine FAI/FAIB	0.00							
QC	**Memo**	0.00							
Quality Control									
130		0.00							
Thermoform	HAND FINISHING THERMOFORMING								
Thermoforming Machine	**Memo**	0.00							
	Trim to Finished Dimensions								

Sequence ID	Accept Qty	Insp. Stamp
110		10/09/08
120		10/09/08
130		10/09/08

Dart Aerospace Ltd

W/O:		WORK ORDER CHANGES					
DATE	STEP	PROCEDURE CHANGE	By	Date	Qty	Approval Chief Eng / Prod Mgr	Approval QC Inspector

Part No: _____ PAR #: _____ Fault Category: _____ NCR: Yes No DQA: _____ Date: _____

Resolution: _____ Disposition: _____ QA: N/C Closed: _____ Date: _____

NCR:		WORK ORDER NON-CONFORMANCE (NCR)						
DATE	STEP	Description of NC Section A	Corrective Action Section B			Verification Section C	Approval Chief Eng	Approval QC Inspector
			Initial Chief Eng	Action Description Chief Eng	Sign & Date			

NOTE: Date & initial all entries

H:\fFORMS\Quality Assurance\approved QA\NCRWO RevE

Work Order ID 61530

Monday, August 30, 2010 10:18:46 AM

Item ID: D3281-4L02 **Accept** **Setup Start**

Revision ID: **Stop**

Item Name: Floor Protector, Aft RH (Black)

Start Date: 8/30/2010 **Start Qty:** 3.00 **Cust Item ID:**

Required Date: 9/6/2010 **Req'd Qty:** 3.00 **Customer:**

Reference:

Approvals: **Process Plan:** _____ **Date:** _____ **Tooling:** _____ **Date:** _____ **Run Start**

QC: _____ **Date:** _____ **SPC (Y/N):** _____ **Date:** _____ **Stop**

Sequence ID/ Work Center ID	Operation Description	Set Up/ Run Hours	Tool ID	Tool #	Plan Code	Accept Qty	Reject Qty	Reject Number	Insp. Stamp
140	QC2- Inspect parts off machine FAI/FAIB	0.00							
QC	Memo	0.00							
Quality Control									
150	QC5- Inspect part completeness to step on W/O	0.00							
QC	Memo	0.00							
Quality Control									
160	Packaging	0.00							
Packaging	Memo	0.00							
Packaging									

Dart Aerospace Ltd

W/O:		WORK ORDER CHANGES					
DATE	STEP	PROCEDURE CHANGE	By	Date	Qty	Approval Chief Eng / Prod Mgr	Approval QC Inspector

Part No: _____ **PAR #:** _____ **Fault Category:** _____ **NCR:** Yes No **DQA:** _____ **Date:** _____

Resolution: _____ **Disposition:** _____ **QA: N/C Closed:** _____ **Date:** _____

NCR:		WORK ORDER NON-CONFORMANCE (NCR)						
DATE	STEP	Description of NC Section A	Corrective Action Section B			Verification Section C	Approval Chief Eng	Approval QC Inspector
			Initial Chief Eng	Action Description Chief Eng	Sign & Date			

NOTE: Date & initial all entries

H:\fFORMS\Quality Assurance\approved QA\NCRWO RevE

Work Order ID 61530

Monday, August 30, 2010 10:18:46 AM

Item ID: D3281-4L02 **Accept** **Setup Start**

Revision ID: **Stop**

Item Name: Floor Protector, Aft RH (Black)

Start Date: 8/30/2010 **Start Qty:** 3.00 **Cust Item ID:**

Required Date: 9/6/2010 **Req'd Qty:** 3.00 **Customer:**

Reference:

Approvals: **Process Plan:** _____ **Date:** _____ **Tooling:** _____ **Date:** _____ **Run Start**

QC: _____ **Date:** _____ **SPC (Y/N):** _____ **Date:** _____ **Stop**

Sequence ID/ Work Center ID	Operation Description	Set Up/ Run Hours	Tool ID	Tool #	Plan Code	Accept Qty	Reject Qty	Reject Number	Insp. Stamp
170	QC21- Final Inspection - Work Order Release	0.00							
QC Quality Control	**Memo**	0.00							

10/09/21
MF
10-9-20

Dart Aerospace Ltd

W/O:		WORK ORDER CHANGES					
DATE	STEP	PROCEDURE CHANGE	By	Date	Qty	Approval Chief Eng / Prod Mgr	Approval QC Inspector

Part No: _____ **PAR #:** _____ **Fault Category:** _____ **NCR:** Yes No **DQA:** _____ **Date:** _____

Resolution: _____ **Disposition:** _____ **QA: N/C Closed:** _____ **Date:** _____

NCR:		WORK ORDER NON-CONFORMANCE (NCR)						
DATE	STEP	Description of NC Section A	Corrective Action Section B			Verification Section C	Approval Chief Eng	Approval QC Inspector
			Initial Chief Eng	Action Description Chief Eng	Sign & Date			

NOTE: Date & initial all entries

H:\fFORMS\Quality Assurance\approved QA\NCRWO RevE

Picklist Print

Monday, August 30, 2010 10:18:50 AM

Work Order ID: 61530

Parent Item: D3281-4L02

Parent Item Name: Floor Protector, Aft RH (Black)

Start Date: 8/30/2010 **Required Date:** 9/6/2010

Start Qty: 3.00 **Required Qty:** 3.00

Comments: IPP Rev:A□04.07.01□New issue□KJ/JLM
IPP Rev B 07.08.07 Thermoform in house DL IPP Rev. C
ADd Step 105 Dry Material 10/04/21 DL

Component Item ID/ Item Name	Replacement Item ID	Mfg/ Purch	Bin Item	Primary Location	Last Location	Route Seq ID	Unit of Measure	Qty on Hand	Qty per Kit	Total Qty	Qty Issued	Date Issued	Status
MLEXS.093-F6006-02 GE PLASTICS LEXAN SHEET		Purchased	No				sf	987.9680	4.333	12.999			

Location	Loc Qty	Loc Code
therm	987.968	
110877	987.968	

~~13 sq~~ ft. DL 10/09/07

Dart Aerospace Ltd

W/O:		WORK ORDER CHANGES					
DATE	STEP	PROCEDURE CHANGE	By	Date	Qty	Approval Chief Eng / Prod Mgr	Approval QC Inspector

Part No: _____ **PAR #:** _____ **Fault Category:** _____ **NCR:** Yes No **DQA:** _____ **Date:** _____

Resolution: _____ **Disposition:** _____ **QA: N/C Closed:** _____ **Date:** _____

NCR:		WORK ORDER NON-CONFORMANCE (NCR)						
DATE	STEP	Description of NC Section A	Corrective Action Section B			Verification Section C	Approval Chief Eng	Approval QC Inspector
			Initial Chief Eng	Action Description Chief Eng	Sign & Date			

NOTE: Date & initial all entries

H:\fFORMS\Quality Assurance\approved QA\NCRWO RevE

DART AEROSPACE LTD	Work Order:	61530
Description: Floor Protector, Aft RH	Part Number:	D3281-4
Inspection Dwg: D3281 **Rev:** E		Page 1 of 1

FIRST ARTICLE INSPECTION CHECKLIST

THERMOFORMING SECTION

Description	Accept	Reject	Method of Inspection	Comments
Inside Radii less than 0.1875"	✓			
Shape Definition	✓			
Texture Retention	✓			
Material imperfections such as bumps, cracks, voids, scratching				

Measured by:	DL	Date:	10/09/08.

TRIMMING SECTION

Drawing Dimension	Tolerance	Actual Dimension	Accept	Reject	Method of Inspection	Comments
17.8	+/-0.100	17.675"	✓		Tape	OK 10.09.08
17.1	+/-0.100	17.00"	✓		"	
14.3	+/-0.100	14.30"	✓		"	
0.95	+/-0.030	0.976"	✓		vern	
0.050	Min	0.067"	✓		mic	
0.070	Min	0.075"	✓		mic	

Measured by:	DL	Date:	10/09/08
Audited by:	S	Date:	10/9/17
Preliminary Approval:	N/A	Date:	N/A

Rev	Date	Change	Revised by	Approved
A	08.02.28	New Issue	KJ/DL	
B	08.04.16	Dimensions updated per Dwg Rev D	KJ/DL	
C	10.09.01	Dimensions updated per Dwg Rev E	KJ	

SHOP COPY
RETURN TO
ENGINEERING
UNCONTROLLED COPY
SUBJECT TO AMENDMENT
WITHOUT NOTICE
WORK ORDER
NO. 41530
BP 10-8-3d

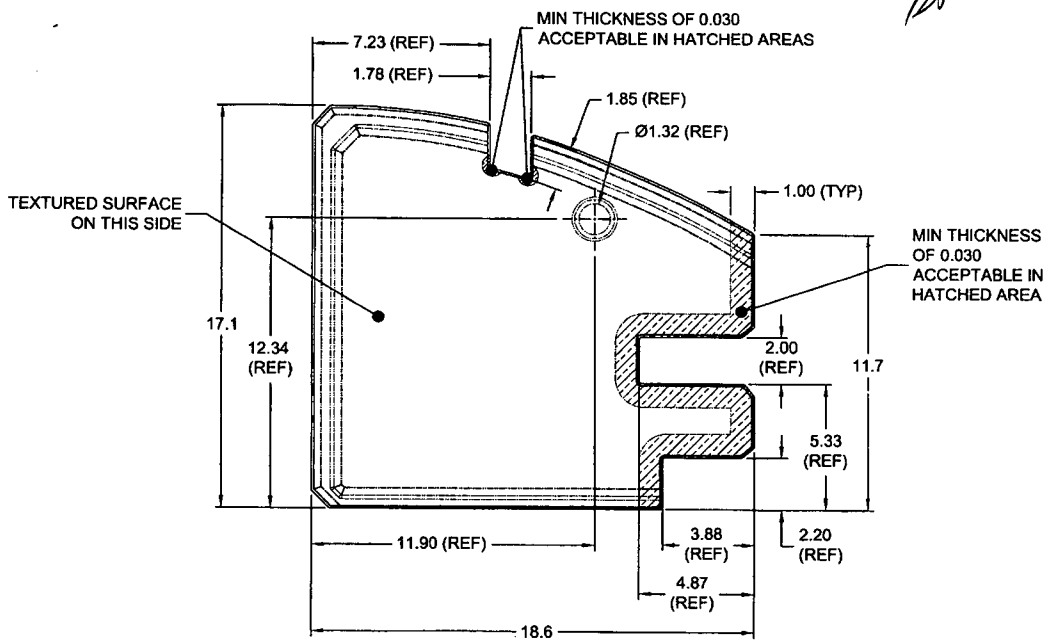

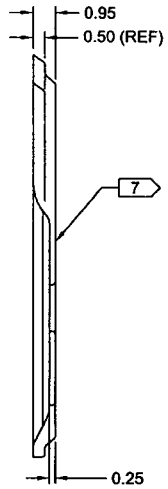

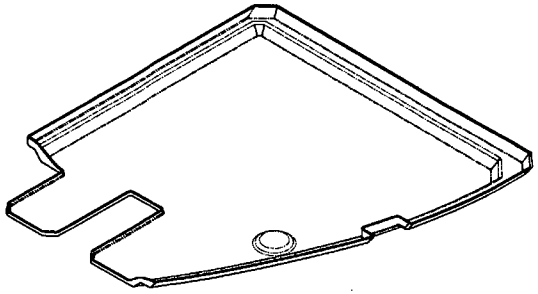

DEO ATTACHED

RELEASED
2010 -02- 03

D3281-1 FLOOR PROTECTOR

D3281-1 NOTES:

1) THERMOFORM WITH MOLD D3281-1T1 PER DART QSI 022; TRIM AS SHOWN
   MINIMUM THICKNESS AFTER FORMING: 0.070" EXCEPT WHERE INDICATED
2) MATERIAL: LEXAN F6006, BLACK No. 701, 0.093" THICK
   (REF DART SPEC MLEXS.093-F6006-02)
3) FINISH: NONE
4) TOLERANCES: PER DART QSI 018 UNLESS OTHERWISE NOTED
5) UNITS: INCHES UNLESS OTHERWISE NOTED
6) BREAK SHARP EDGES: 0.010 MAX
7) IDENTIFICATION: IDENTIFY WITH DART P/N "D3281-1" AND BATCH NUMBER "BXXXXX" ON SMOOTH SIDE OF PART USING VIBRATING STYLUS
8) WEIGHT: 0.95 lb

REV.	DESCRIPTION	BY	DATE
E	-3/-4 NOW TRIMMED FLAT: RMV 0.25 BEVEL TO FACILITATE TRIMMING (ZN D6-3, D4-4)	CP	10.01.05
D	THICKNESS 0.093 WAS 0.125, MIN THICKNESS 0.070 WAS 0.080, P/N AND B/N ID WITH VIBRATING STYLUS (ZN A7-1, A7-2, A7-3, A7-4); D3281-4 NOW ON PAGE 4; CORRECT WEIGHTS (ZN A8-1, A8-2, A8-3, A8-4)	PH	08.03.28
C	UPDATE DIMS TO MATCH PARTS: COLOUR 701 WAS 700; GENERAL UPDATE	LE	07.10.09
B	NOW LEXAN; DIMS AS MANUFACTURED	CP	05.11.25
A	NEW ISSUE	CP	04.05.03

DESIGN		DART AEROSPACE LTD HAWKESBURY, ONTARIO, CANADA	
DRAWN			
CHECKED		DRAWING NO. D3281	REV. E SHEET 1 OF 4
MFG. APPR.			
APPROVED		TITLE FLOOR PROTECTOR	SCALE NTS
DE APPR.			
DATE	10.01.05		

COPYRIGHT © 2004 BY DART AEROSPACE LTD
THIS DOCUMENT IS PRIVATE AND CONFIDENTIAL AND IS SUPPLIED ON THE EXPRESS CONDITION THAT IT IS NOT TO BE USED FOR ANY PURPOSE OR COPIED OR COMMUNICATED TO ANY OTHER PERSON WITHOUT WRITTEN PERMISSION FROM DART AEROSPACE LTD

Dart Aerospace Ltd

W/O:		WORK ORDER CHANGES					
DATE	STEP	PROCEDURE CHANGE	By	Date	Qty	Approval Chief Eng / Prod Mgr	Approval QC Inspector

Part No: _____ PAR #: _____ Fault Category: _____ NCR: Yes No DQA: _____ Date: _____

Resolution: _____ Disposition: _____ QA: N/C Closed: _____ Date: _____

NCR:		WORK ORDER NON-CONFORMANCE (NCR)						
DATE	STEP	Description of NC Section A	Corrective Action Section B			Verification Section C	Approval Chief Eng	Approval QC Inspector
			Initial Chief Eng	Action Description Chief Eng	Sign & Date			

NOTE: Date & initial all entries

H:\fFORMS\Quality Assurance\approved QA\NCRWO RevE

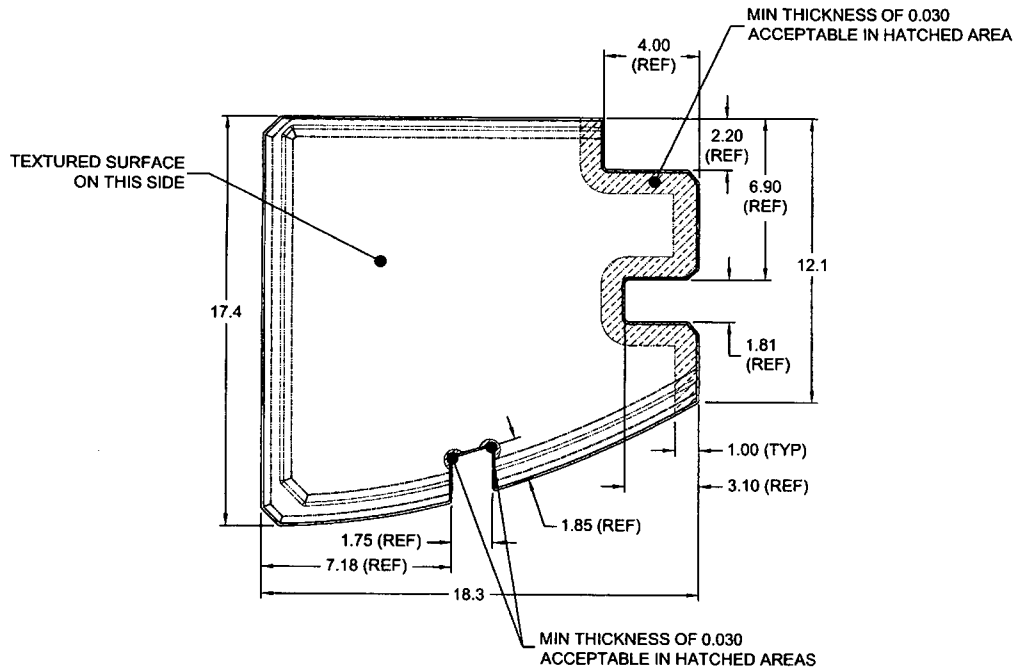

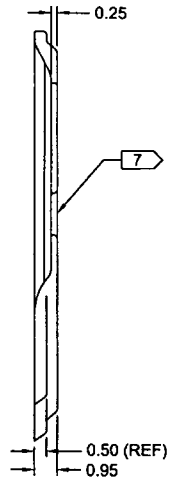

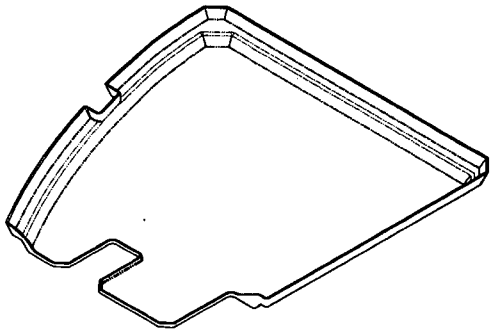

w/061530

DEO ATTACHED

RELEASED
2010 -02- 03

D3281-2 FLOOR PROTECTOR

D3281-2 NOTES:

1) THERMOFORM WITH MOLD D3281-2T1 PER DART QSI 022; TRIM AS SHOWN
   MINIMUM THICKNESS AFTER FORMING: 0.070" EXCEPT WHERE INDICATED
2) MATERIAL: LEXAN F6006, BLACK No. 701, 0.093" THICK
   (REF DART SPEC MLEXS.093-F6006-02)
3) FINISH: NONE
4) TOLERANCES: PER DART QSI 018 UNLESS OTHERWISE NOTED
5) UNITS: INCHES UNLESS OTHERWISE NOTED
6) BREAK SHARP EDGES: 0.010 MAX
7) IDENTIFICATION: IDENTIFY WITH DART P/N "D3281-2" AND BATCH NUMBER "BXXXXX" ON SMOOTH SIDE OF PART USING VIBRATING STYLUS
8) WEIGHT: 0.97 lb

DESIGN		DART AEROSPACE LTD HAWKESBURY, ONTARIO, CANADA
DRAWN		
CHECKED		DRAWING NO. D3281 — REV. E — SHEET 2 OF 4
MFG. APPR.		
APPROVED		TITLE: FLOOR PROTECTOR — SCALE: NTS
DE APPR.		
DATE	10.01.05	

COPYRIGHT © 2004 BY DART AEROSPACE LTD
THIS DOCUMENT IS PRIVATE AND CONFIDENTIAL AND IS SUPPLIED ON THE EXPRESS CONDITION THAT IT IS NOT TO BE USED FOR ANY PURPOSE OR COPIED OR COMMUNICATED TO ANY OTHER PERSON WITHOUT WRITTEN PERMISSION FROM DART AEROSPACE LTD.

Dart Aerospace Ltd

W/O:		WORK ORDER CHANGES					
DATE	STEP	PROCEDURE CHANGE	By	Date	Qty	Approval Chief Eng / Prod Mgr	Approval QC Inspector

Part No: _____ **PAR #:** _____ **Fault Category:** _____ **NCR:** Yes No **DQA:** _____ **Date:** _____

Resolution: _____ **Disposition:** _____ **QA: N/C Closed:** _____ **Date:** _____

NCR:		WORK ORDER NON-CONFORMANCE (NCR)						
DATE	STEP	Description of NC Section A	Corrective Action Section B			Verification Section C	Approval Chief Eng	Approval QC Inspector
			Initial Chief Eng	Action Description Chief Eng	Sign & Date			

NOTE: Date & initial all entries

H:\fFORMS\Quality Assurance\approved QA\NCRWO RevE

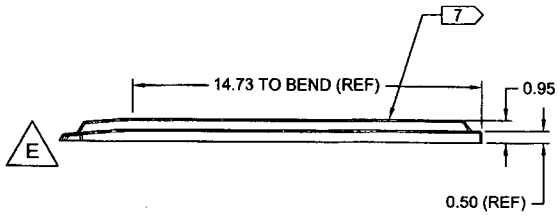

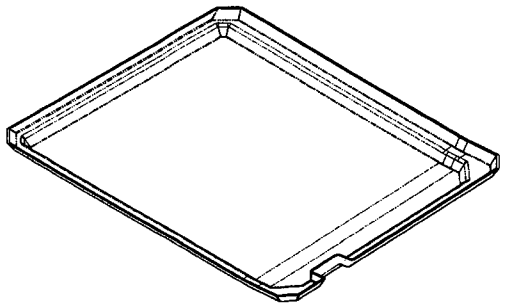

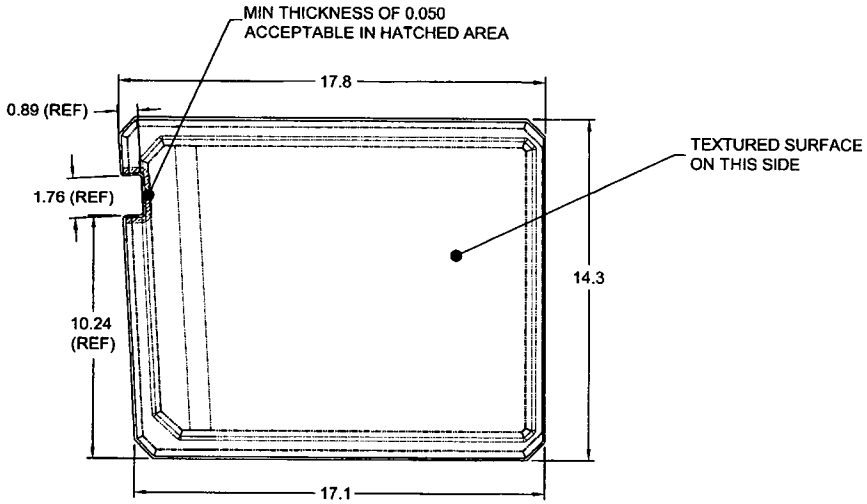

w/o 61538

DEO ATTACHED

RELEASED
2010 -02- 03

D3281-3 FLOOR PROTECTOR

D3281-3 NOTES:

1) THERMOFORM WITH MOLD D3281-3T1 PER DART QSI 022; TRIM AS SHOWN
   MINIMUM THICKNESS AFTER FORMING: 0.070" EXCEPT WHERE INDICATED
2) MATERIAL: LEXAN F6006, BLACK No. 701, 0.093" THICK
   (REF DART SPEC MLEXS.093-F6006-02)
3) FINISH: NONE
4) TOLERANCES: PER DART QSI 018 UNLESS OTHERWISE NOTED
5) UNITS: INCHES UNLESS OTHERWISE NOTED
6) BREAK SHARP EDGES: 0.010 MAX
7) IDENTIFICATION: IDENTIFY WITH DART P/N "D3281-3" AND BATCH NUMBER "BXXXXX"ON SMOOTH SIDE OF PART USING VIBRATING STYLUS
8) WEIGHT: 0.87 lb

DESIGN		DART AEROSPACE LTD HAWKESBURY, ONTARIO, CANADA	
DRAWN			
CHECKED		DRAWING NO.	REV. E
MFG. APPR.		D3281	SHEET 3 OF 4
APPROVED		TITLE	SCALE
DE APPR.		FLOOR PROTECTOR	NTS
DATE	10.01.05		

COPYRIGHT © 2004 BY DART AEROSPACE LTD
THIS DOCUMENT IS PRIVATE AND CONFIDENTIAL AND IS SUPPLIED ON THE EXPRESS CONDITION THAT IT IS NOT TO BE USED FOR ANY PURPOSE OR COPIED OR COMMUNICATED TO ANY OTHER PERSON WITHOUT WRITTEN PERMISSION FROM DART AEROSPACE LTD

Dart Aerospace Ltd

W/O:		WORK ORDER CHANGES					
DATE	STEP	PROCEDURE CHANGE	By	Date	Qty	Approval Chief Eng / Prod Mgr	Approval QC Inspector

Part No: _____ PAR #: _____ Fault Category: _____ NCR: Yes No DQA: _____ Date: _____

Resolution: _____ Disposition: _____ QA: N/C Closed: _____ Date: _____

NCR:		WORK ORDER NON-CONFORMANCE (NCR)						
DATE	STEP	Description of NC Section A	Corrective Action Section B			Verification Section C	Approval Chief Eng	Approval QC Inspector
			Initial Chief Eng	Action Description Chief Eng	Sign & Date			

NOTE: Date & initial all entries

H:\fFORMS\Quality Assurance\approved QA\NCRWO RevE

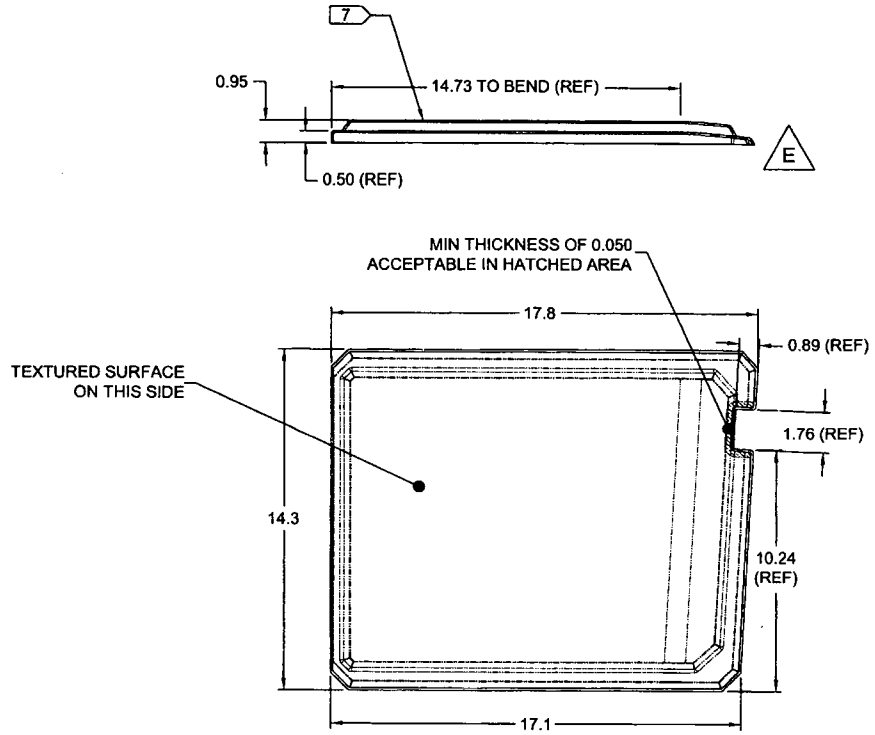

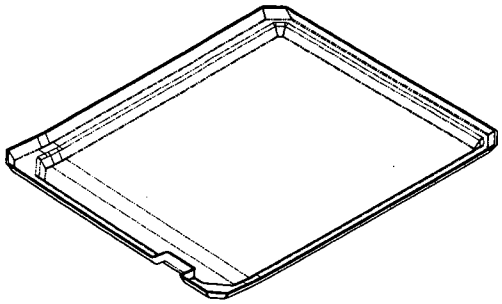

w/o 41530

DEO ATTACHED

RELEASED
2010-02-03

D3281-4 FLOOR PROTECTOR

D3281-4 NOTES:

1) THERMOFORM WITH MOLD D3281-4T1 PER DART QSI 022; TRIM AS SHOWN
   MINIMUM THICKNESS AFTER FORMING: 0.070" EXCEPT WHERE INDICATED
2) MATERIAL: LEXAN F6006, BLACK No. 701, 0.093" THICK
   (REF DART SPEC MLEXS.093-F6006-02)
3) FINISH: NONE
4) TOLERANCES: PER DART QSI 018 UNLESS OTHERWISE NOTED
5) UNITS: INCHES UNLESS OTHERWISE NOTED
6) BREAK SHARP EDGES: 0.010 MAX
7) IDENTIFICATION: IDENTIFY WITH DART P/N "D3281-4" AND BATCH NUMBER "BXXXXX"ON SMOOTH SIDE OF PART USING VIBRATING STYLUS
8) WEIGHT: 0.87 lb

DESIGN		**DART AEROSPACE LTD** HAWKESBURY, ONTARIO, CANADA
DRAWN		
CHECKED		DRAWING NO. D3281 — REV. E — SHEET 4 OF 4
MFG. APPR.		
APPROVED		TITLE: FLOOR PROTECTOR — SCALE: NTS
DE APPR.		
DATE	10.01.05	

COPYRIGHT © 2004 BY DART AEROSPACE LTD
THIS DOCUMENT IS PRIVATE AND CONFIDENTIAL AND IS SUPPLIED ON THE EXPRESS CONDITION THAT IT IS NOT TO BE USED FOR ANY PURPOSE OR COPIED OR COMMUNICATED TO ANY OTHER PERSON WITHOUT WRITTEN PERMISSION FROM DART AEROSPACE LTD.

Dart Aerospace Ltd

W/O:		WORK ORDER CHANGES					
DATE	STEP	PROCEDURE CHANGE	By	Date	Qty	Approval Chief Eng / Prod Mgr	Approval QC Inspector

Part No: _____ **PAR #:** _____ **Fault Category:** _____ **NCR:** Yes No **DQA:** _____ **Date:** _____

Resolution: _____ **Disposition:** _____ **QA: N/C Closed:** _____ **Date:** _____

NCR:		WORK ORDER NON-CONFORMANCE (NCR)						
DATE	STEP	Description of NC Section A	Corrective Action Section B			Verification Section C	Approval Chief Eng	Approval QC Inspector
			Initial Chief Eng	Action Description Chief Eng	Sign & Date			

NOTE: Date & initial all entries

H:\fFORMS\Quality Assurance\approved QA\NCRWO RevE

DRAWING NO.	TITLE		DART AEROSPACE LTD ENGINEERING ORDER	D.E.O. NO.	SHEET NO.	SCALE
D3281	FLOOR PROTECTOR	REV. E		D3281-E-1	SHEET 1 OF 1	NTS
DRAWN	CHECKED		MFG. APPR.	APPROVED	DE APPR.	
DATE 10.02.24	DATE 10.02.25		DATE 10/02/25	DATE 10.02.25	DATE 10.02.25	

PURPOSE

ADD "D3281-x**L08**" MATERIAL OPTION. EXISTING PARTS TO BE IDENTIFIED AS "D3281-x**L02**"

CHANGE

D3281-xL08 PARTS ARE EQUIVALENT TO THE RESPECTIVE "-x" PARTS EXCEPT AS DETAIL BELOW. THE MATERIAL, IDENTIFICATION, AND WEIGHT NOTES ARE AMENDED AS FOLLOWS:

2) MATERIAL: -xL02 = LEXAN F6006, BLACK No. 701, 0.093" THICK (MLEXS.093-F6006-02)
-xL08 = LEXAN 90318 (PROTECT-A-GLAZE), 0.118 THICK, 112-CLEAR (MLEXS.118-90318-08)

7) IDENTIFICATION: IDENTIFY WITH DART P/N "D3281-xLxx" AND B/N "Bxxxxx" ON SMOOTH SIDE OF PART USING VIBRATING STYLUS. FOR -xL08 PARTS, LOCATE ENGRAVING ALONG PERIMETER OF PART AS SHOWN.

8) WEIGHT: D3281-1L02/-2L02 = 0.95 lb D3281-1L08/-2L08 = 1.13 lb
D3281-1L02/-2L02 = 0.87 lb D3281-3L08/-4L08 = 1.05 lb

w/o 61538

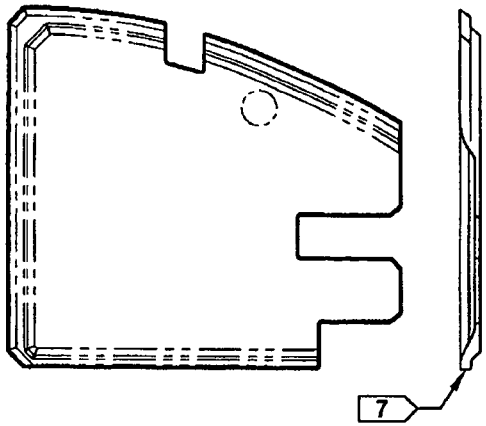

D3281-1L08 FLOOR PROTECTOR (SHOWN)
D3281-2L08 FLOOR PRETECTOR (OPPOSITE)
LOCATION OF ENGRAVING

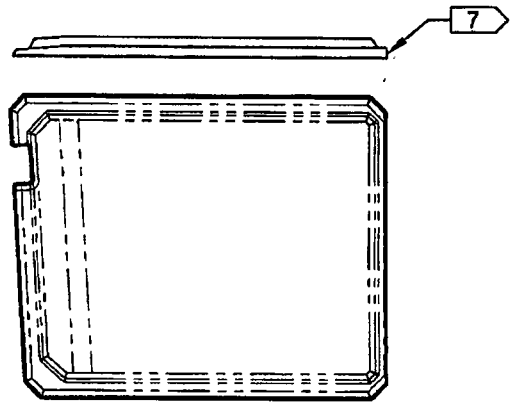

D3281-3L08 FLOOR PROTECTOR (SHOWN)
D3281-4L08 FLOOR PRETECTOR (OPPOSITE)
LOCATION OF ENGRAVING

RELEASED 2010-02-26

COPYRIGHT © 2010 BY DART AEROSPACE LTD
THIS DOCUMENT IS PRIVATE AND CONFIDENTIAL AND IS SUPPLIED ON THIS EXPRESS CONDITION THAT IT IS NOT TO BE USED FOR ANY PURPOSE OR COPIED OR COMMUNICATED TO ANY OTHER PERSON WITHOUT WRITTEN PERMISSION FROM DART AEROSPACE LTD.

Dart Aerospace Ltd

W/O:		WORK ORDER CHANGES					
DATE	STEP	PROCEDURE CHANGE	By	Date	Qty	Approval Chief Eng / Prod Mgr	Approval QC Inspector

Part No: _____ PAR #: _____ Fault Category: _____ NCR: Yes No DQA: _____ Date: _____

Resolution: _____ Disposition: _____ QA: N/C Closed: _____ Date: _____

NCR:		WORK ORDER NON-CONFORMANCE (NCR)						
DATE	STEP	Description of NC Section A	Corrective Action Section B			Verification Section C	Approval Chief Eng	Approval QC Inspector
			Initial Chief Eng	Action Description Chief Eng	Sign & Date			

NOTE: Date & initial all entries

H:\fFORMS\Quality Assurance\approved QA\NCRWO RevE